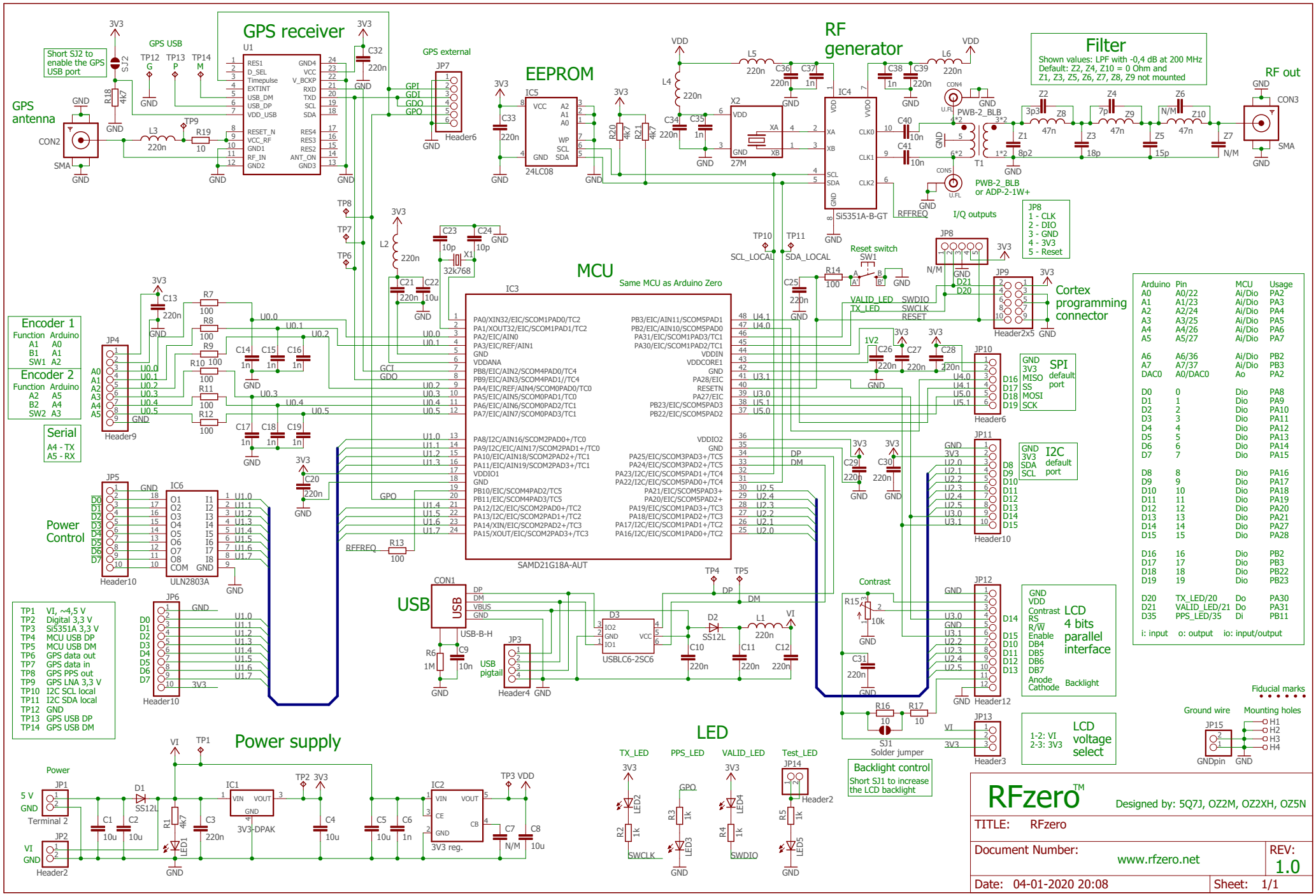
GPS receiver
U1
GPS antenna
CON2
SMA
Short SJ2 to enable the GPS USB port
SJ2
GPS USB
TP12 G
TP13 P
TP14 M
R18 4k7
L3 220n
TP9
R19 10
RESET_N
VCC_RF
GND1
RF_IN
GND2
RES1
D_SEL
Timepulse
EXTINT
USB_DM
USB_DP
VDD_USB
GND4
VCC
V_BCKP
RXD
TXD
SCL
SDA
RES4
RES3
RES2
ANT_ON
GND3
C32 220n
GPS external
JP7
GPI
GDI
GDO
GPO
Header6
EEPROM
IC5
24LC08
VCC
A2
A1
A0
WP
SCL
SDA
GND
C33 220n
R20 4k7
R21 4k7
RF generator
IC4
Si5351A-B-GT
VDD
VDDO
XA
XB
CLK0
CLK1
CLK2
SCL
SDA
GND
L4 220n
L5 220n
L6 220n
C34 220n
C35 1n
C36 220n
C37 1n
C38 1n
C39 220n
X2
27M
C40 10n
C41 10n
CON4
CON5
U.FL
PWB-2_BLB
T1
PWB-2_BLB or ADP-2-1W+
RFFREQ
I/Q outputs
Filter
Shown values: LPF with -0,4 dB at 200 MHz
Default: Z2, Z4, Z10 = 0 Ohm and
Z1, Z3, Z5, Z6, Z7, Z8, Z9 not mounted
Z1 8p2
Z2 3p3
Z3 18p
Z4 7p
Z5 15p
Z6 N/M
Z7 N/M
Z8 47n
Z9 47n
Z10 47n
RF out
CON3
SMA
TP8
TP7
TP6
L2 220n
C23 10p
C24 10p
X1 32k768
C21 220n
C22 10u
MCU
Same MCU as Arduino Zero
IC3
SAMD21G18A-AUT
PA0/XIN32/EIC/SCOM1PAD0/TC2
PA1/XOUT32/EIC/SCOM1PAD1/TC2
PA2/EIC/AIN0
PA3/EIC/REF/AIN1
GND
VDDANA
PB8/EIC/AIN2/SCOM4PAD0/TC4
PB9/EIC/AIN3/SCOM4PAD1//TC4
PA4/EIC/REF/AIN4/SCOM0PAD0/TC0
PA5/EIC/AIN5/SCOM0PAD1/TC0
PA6/EIC/AIN6/SCOM0PAD2/TC1
PA7/EIC/AIN7/SCOM0PAD3/TC1
PA8/I2C/AIN16/SCOM2PAD0+/TC0
PA9/I2C/EIC/AIN17/SCOM2PAD1+/TC0
PA10/EIC/AIN18/SCOM2PAD2+/TC1
PA11/EIC/AIN19/SCOM2PAD3+/TC1
VDDIO1
GND
PB10/EIC/SCOM4PAD2/TC5
PB11/EIC/SCOM4PAD3/TC5
PA12/I2C/EIC/SCOM2PAD0+/TC2
PA13/I2C/EIC/SCOM2PAD1+/TC2
PA14/XIN/EIC/SCOM2PAD2+/TC3
PA15/XOUT/EIC/SCOM2PAD3+/TC3
PB3/EIC/AIN11/SCOM5PAD1
PB2/EIC/AIN10/SCOM5PAD0
PA31/EIC/SCOM1PAD3/TC1
PA30/EIC/SCOM1PAD2/TC1
VDDIN
VDDCORE1
GND
PA28/EIC
RESETN
PA27/EIC
PB23/EIC/SCOM5PAD3
PB22/EIC/SCOM5PAD2
VDDIO2
GND
PA25/EIC/SCOM3PAD3+/TC5
PA24/EIC/SCOM3PAD2+/TC5
PA23/I2C/EIC/SCOM5PAD1+/TC4
PA22/I2C/EIC/SCOM5PAD0+/TC4
PA21/EIC/SCOM5PAD3+
PA20/EIC/SCOM5PAD2+
PA19/EIC/SCOM1PAD3+/TC3
PA18/EIC/SCOM1PAD2+/TC3
PA17/I2C/EIC/SCOM1PAD1+/TC2
PA16/I2C/EIC/SCOM1PAD0+/TC2
GCI
GDO
GPO
RFFREQ
R13 100
TP10 SCL_LOCAL
TP11 SDA_LOCAL
R14 100
Reset switch
SW1
VALID_LED
TX_LED
SWDIO
SWCLK
RESET
JP8
JP8
1 - CLK
2 - DIO
3 - GND
4 - 3V3
5 - Reset
JP9
Header2x5
Cortex programming connector
Encoder 1
Function Arduino
A1 A0
B1 A1
SW1 A2
Encoder 2
Function Arduino
A2 A5
B2 A4
SW2 A3
Serial
A4 - TX
A5 - RX
JP4
Header9
R7 100
R8 100
R9 100
R10 100
R11 100
R12 100
C13 220n
C14 1n
C15 1n
C16 1n
C17 1n
C18 1n
C19 1n
C20 220n
C25 220n
C26 220n
C27 220n
C28 220n
C29 220n
C30 220n
1V2
JP10
Header6
SPI
GND
3V3
MISO
SS
MOSI
SCK
default port
JP11
Header10
I2C
GND
3V3
SDA
SCL
default port
Power Control
JP5
Header10
IC6
ULN2803A
JP6
Header10
USB
CON1
USB-B-H
DP
DM
VBUS
GND
R6 1M
C9 10n
JP3
USB pigtail
Header4
D3
USBLC6-2SC6
D2
SS12L
L1 220n
C10 220n
C11 220n
C12 220n
TP4
TP5
Contrast
R15 10k
C31 220n
JP12
Header12
LCD
4 bits parallel interface
GND
VDD
Contrast
RS
R/W
Enable
DB4
DB5
DB6
DB7
Anode
Cathode
Backlight
R16 10
R17 10
SJ1
Solder jumper
JP13
Header3
1-2: VI
2-3: 3V3
LCD voltage select
Backlight control
Short SJ1 to increase the LCD backlight
Arduino Pin MCU Usage
A0 A0/22 Ai/Dio PA2
A1 A1/23 Ai/Dio PA3
A2 A2/24 Ai/Dio PA4
A3 A3/25 Ai/Dio PA5
A4 A4/26 Ai/Dio PA6
A5 A5/27 Ai/Dio PA7
A6 A6/36 Ai/Dio PB2
A7 A7/37 Ai/Dio PB3
DAC0 A0/DAC0 Ao PA2
D0 0 Dio PA8
D1 1 Dio PA9
D2 2 Dio PA10
D3 3 Dio PA11
D4 4 Dio PA12
D5 5 Dio PA13
D6 6 Dio PA14
D7 7 Dio PA15
D8 8 Dio PA16
D9 9 Dio PA17
D10 10 Dio PA18
D11 11 Dio PA19
D12 12 Dio PA20
D13 13 Dio PA21
D14 14 Dio PA27
D15 15 Dio PA28
D16 16 Dio PB2
D17 17 Dio PB3
D18 18 Dio PB22
D19 19 Dio PB23
D20 TX_LED/20 Do PA30
D21 VALID_LED/21 Do PA31
D35 PPS_LED/35 Di PB11
i: input o: output io: input/output
TP1 VI, ~4,5 V
TP2 Digital 3,3 V
TP3 Si5351A 3,3 V
TP4 MCU USB DP
TP5 MCU USB DM
TP6 GPS data out
TP7 GPS data in
TP8 GPS PPS out
TP9 GPS LNA 3,3 V
TP10 I2C SCL local
TP11 I2C SDA local
TP12 GND
TP13 GPS USB DP
TP14 GPS USB DM
Power supply
Power
5 V
GND
JP1
Terminal 2
VI
GND
JP2
Header2
D1 SS12L
R1 4k7
LED1
C1 10u
C2 10u
C3 220n
IC1
3V3-DPAK
VIN
VOUT
GND
TP2 3V3
C4 10u
C5 10u
C6 1n
IC2
3V3 reg.
VIN
VOUT
CE
CB
GND
TP3 VDD
C7 N/M
C8 10u
LED
TX_LED
PPS_LED
VALID_LED
Test_LED
JP14
Header2
R2 1k
LED2
SWCLK
R3 1k
LED3
GPO
R4 1k
LED4
SWDIO
R5 1k
LED5
Fiducial marks
Ground wire
Mounting holes
JP15
GNDpin
H1
H2
H3
H4
RFzero™
Designed by: 5Q7J, OZ2M, OZ2XH, OZ5N
TITLE: RFzero
Document Number:
www.rfzero.net
REV: 1.0
Date: 04-01-2020 20:08
Sheet: 1/1